SYSTEM WIRING DIAGRAMS
Power Antenna Circuit
1989 Mercedes-Benz 260E
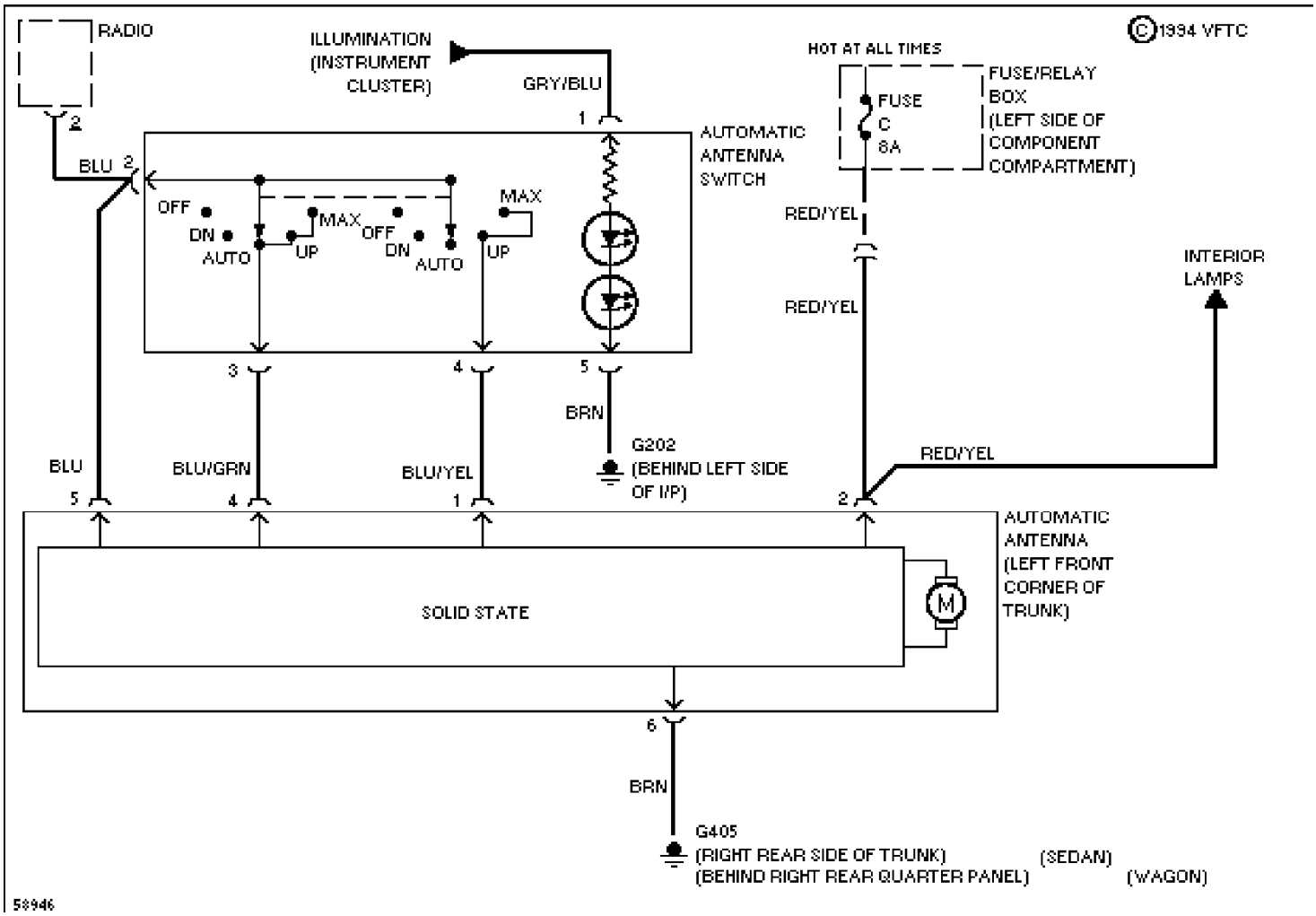
For DIAKOM-AUTO http://www.diakom.ru Taganrog support@diakom.ru (8634)315187
Copyright © 1998 Mitchell Repair Information Company, LLC
Wednesday, November 29, 2000 07:40PM