B. Fuel supply

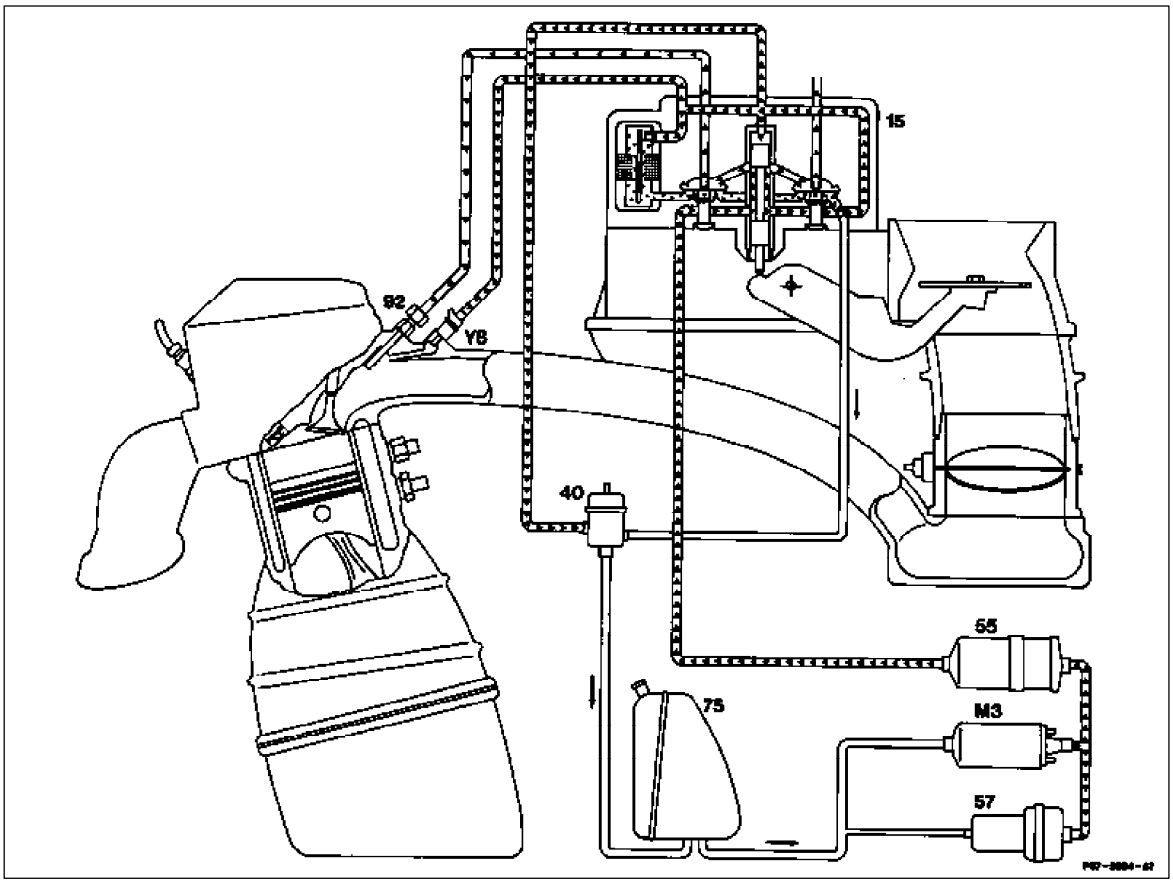

System pressure/upper chamber pressure
Lower chamber pressure
Injection pressure
pressureless

The fuel supply consists of:

- Fuel tank (75) with fuel evaporation system (see Group 47)
- Fuel pump (M3)
- Fuel filter (55)
- Fuel accumulator (57)
- Fuel distributor (15)
- Diaphragm pressure regulator (40)
- Injection valve (92)

The fuel is drawn out of the fuel tank (75) by the electric fuel pump (M3) and pumped through the fuel filter (55) to the fuel distributor (15) and start valve (Y8). At the same time, the fuel accumulator (57) which is connected in parallel to the fuel filter is also filled. The diaphragm pressure regulator (40) maintains a constant system pressure and returns the excess fuel along the return line to the fuel tank.

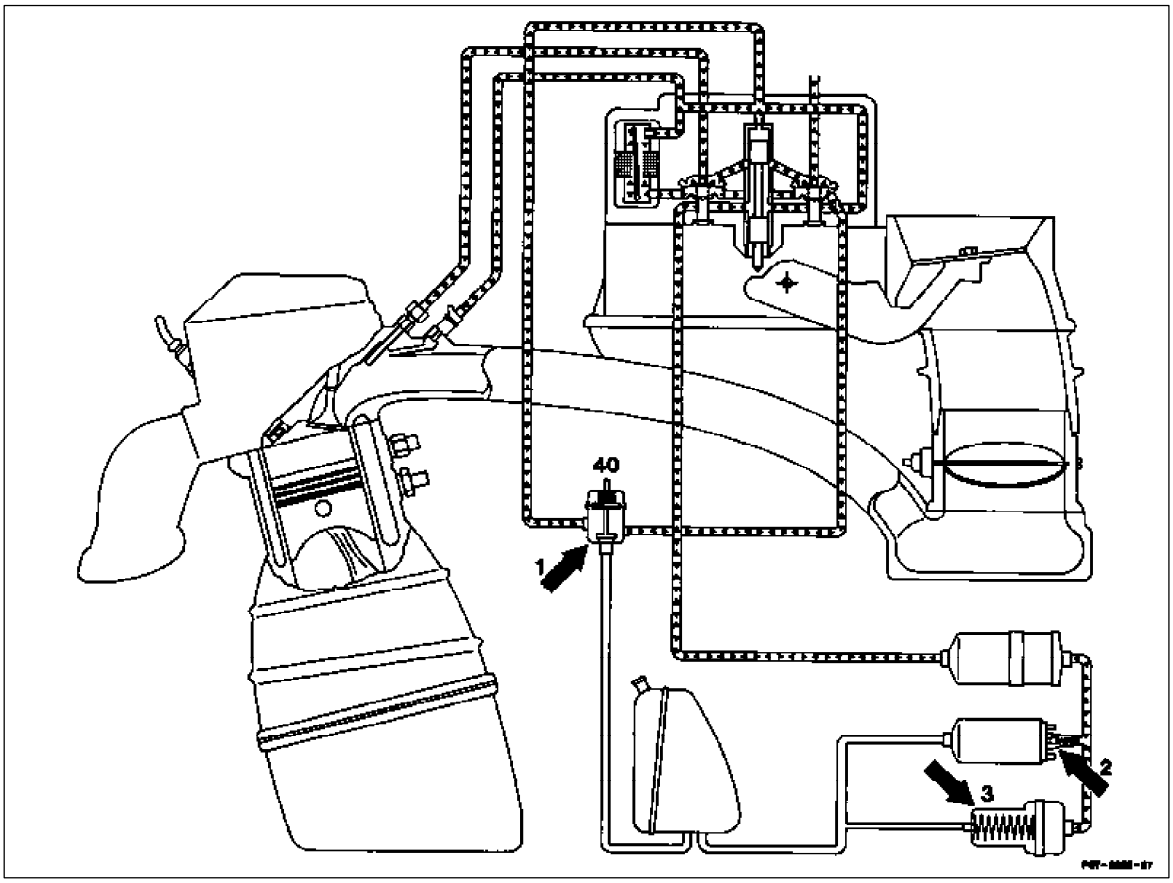

Holding pressure

pressureless

W
hen the engine is switched off, the pressure conditions change. The diaphragm pressure regulator (40) determines the level of the holding pressure. The holding pressure is always below the opening pressure of the injection valves.
The sealing plate (arrow 1) in the diaphragm pressure regulator closes the fuel return line to the fuel tank.

The non-return valve (arrow 2) on the pressure side of the fuel pump prevents the fuel flowing back into the fuel tank from this side.

The pretensioned compression spring behind the diaphragm (arrow 3) in the fuel accumulator ensures that the holding pressure is maintained over a lengthy period.

The holding pressure largely prevents the formation of vapour bubbles in the fuel system and thus ensures good starting properties of the warm engine.

a) Fuel pump set

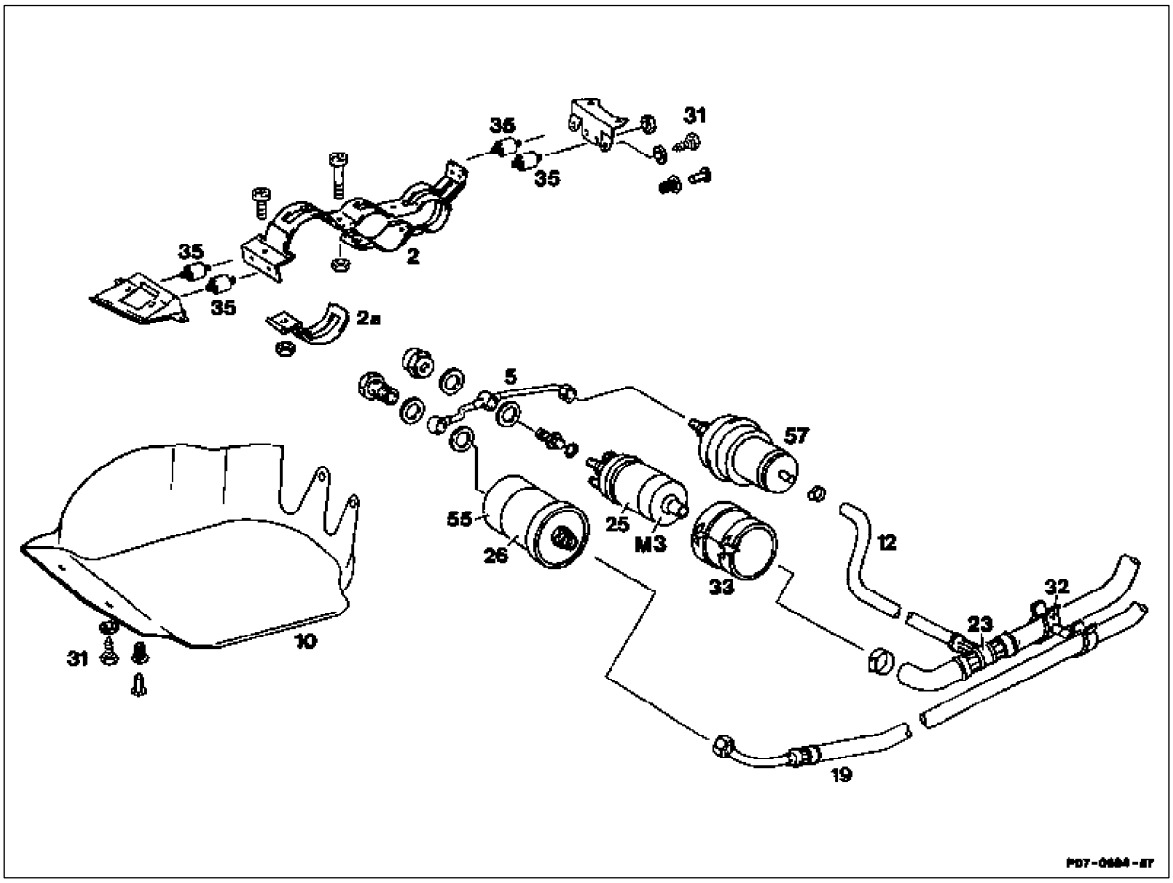

Fuel pump set with 1 fuel pump
Shown on model 201

The fuel pump set is composed of fuel pump (M3), fuel filter (55) and fuel accumulator (57). On models with double pump version, two fuel pumps are connected in series at the fuel pump set.

The fuel pump set is attached to the frame floor in the area of the rear axle. At first, the pump set was suspended on rubber-metal vibration dampers (35). A conversion was made subse q uently to rubber rings. A plastic cover (10) protects the fuel pump set.

The brackets (2, 2a) at the fuel pump set vary in design depending on pump diameter, number of pumps, filter diameter, type of suspension system and line routing.

Filter and pump are installed at the bracket with plastic sleeves (25, 26) to avoid contact corrosion.

On various models two fuel pumps M3/1 and M3/2 are installed (connected in series).

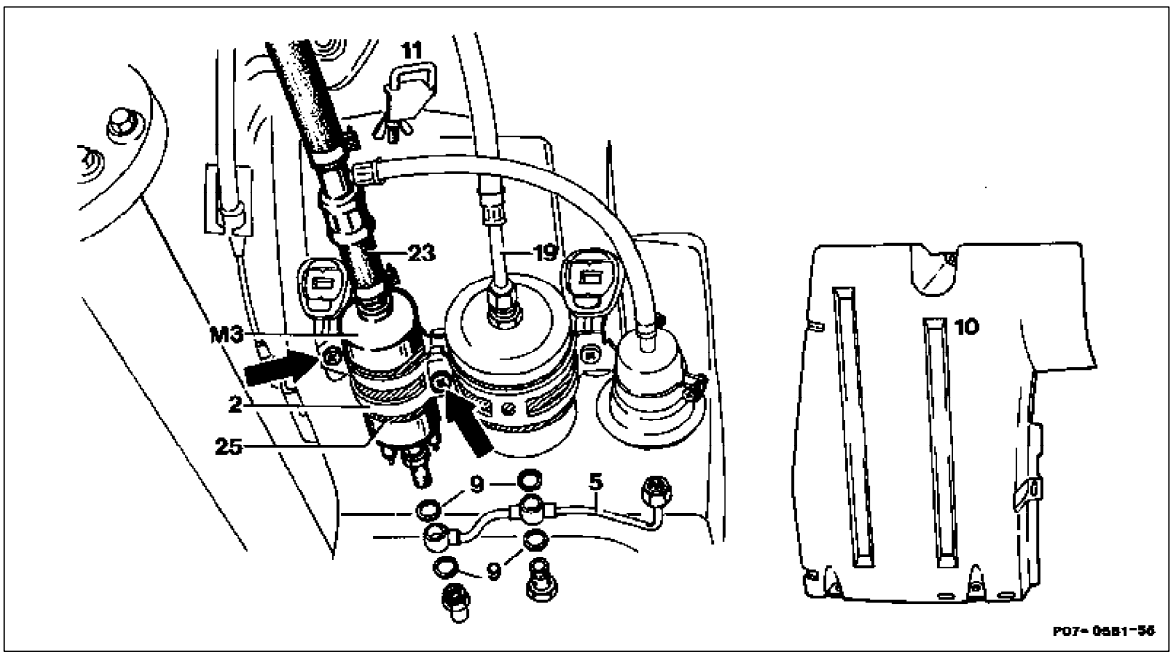

Fuel pump set with 1 fuel pump
Shown on model 124 Sedan/Coupй

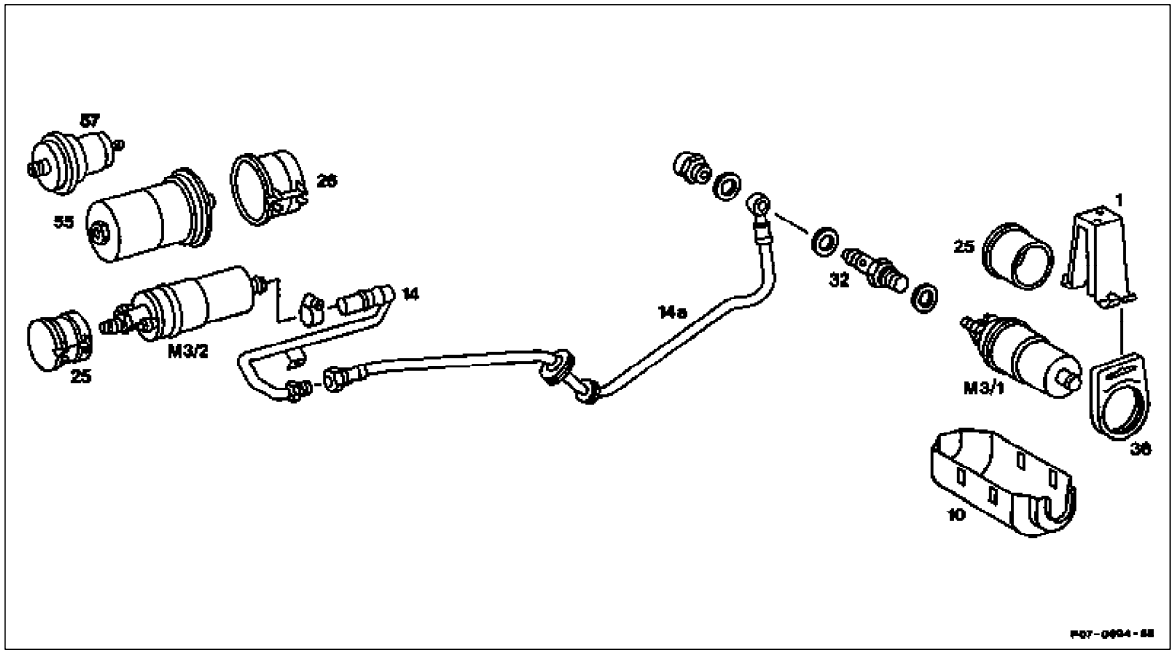

Fuel pump set with 2 fuel pumps
Shown on model 124 T model

The fuel pump is suspended on rubber rings between rear axle and fuel tank in order to achieve short suction distances. In the case of the double pump version, the second fuel pump is housed in the fuel pump set. In the case of versions with one fuel pump, the space in the fuel pump set is vacant.

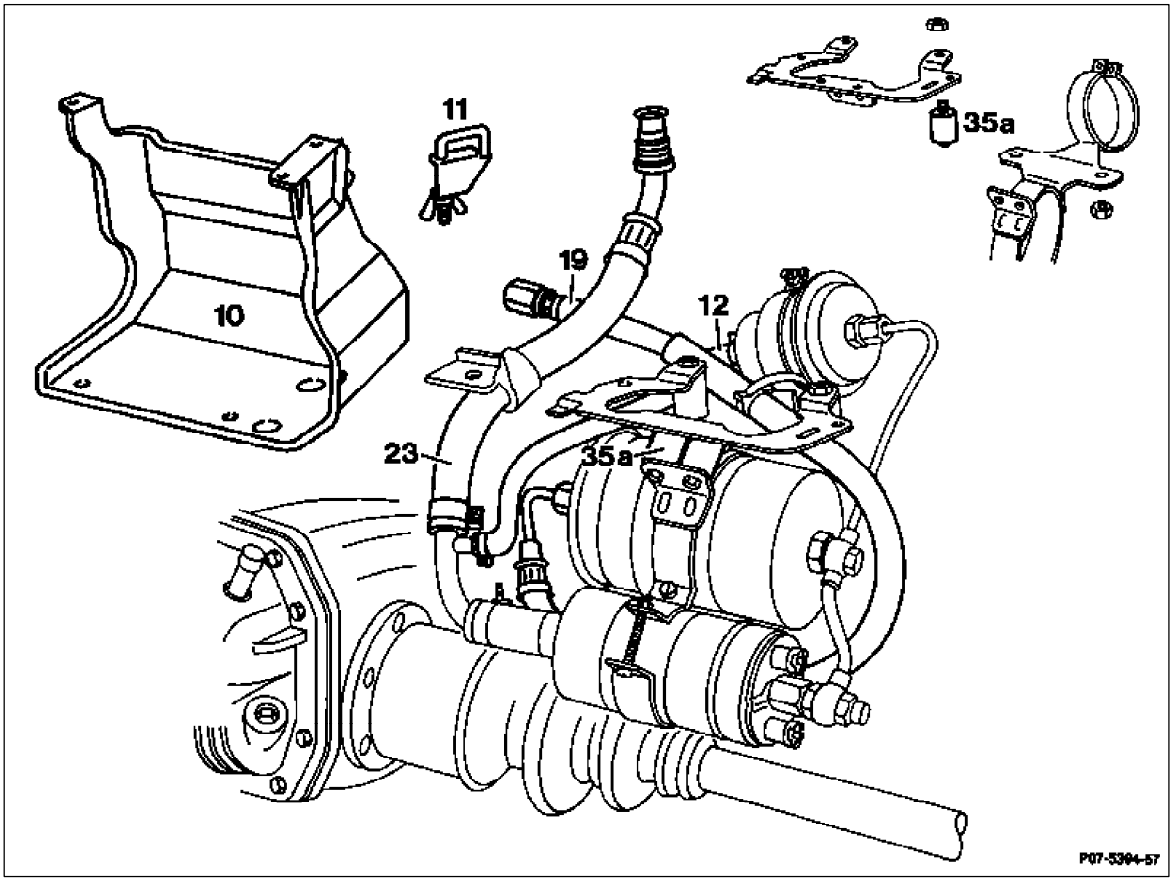

Fuel pump set with 1 fuel pump
Shown on models 107, 126

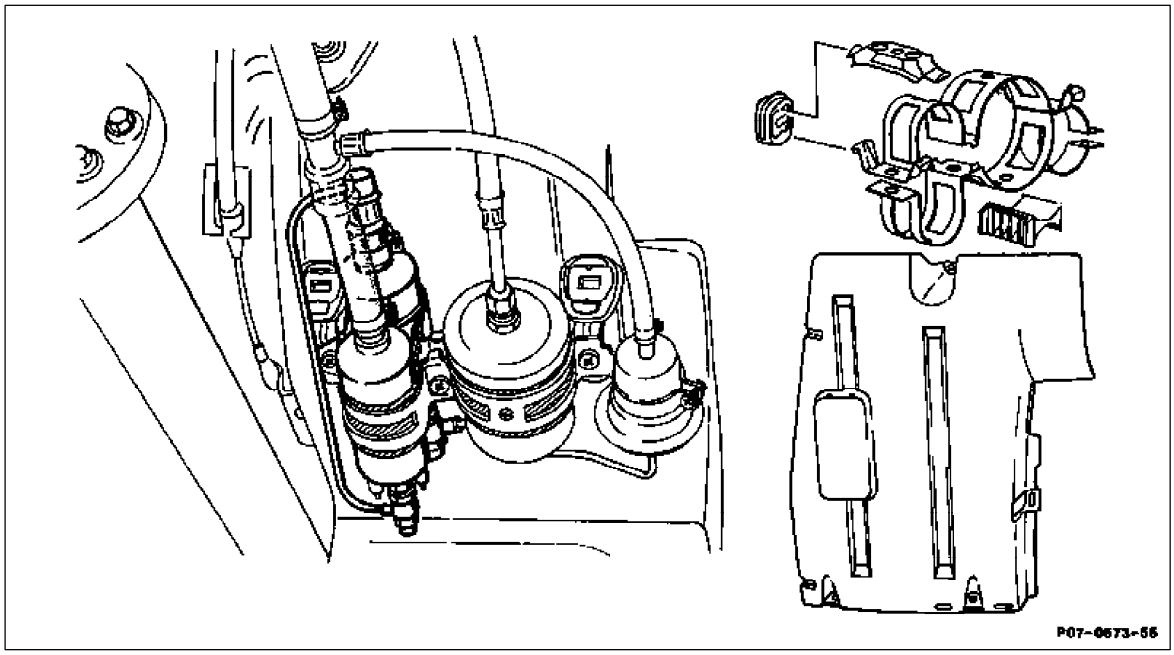

Fuel pump set with 1 fuel pump
Shown on model 129

b) Fuel pump

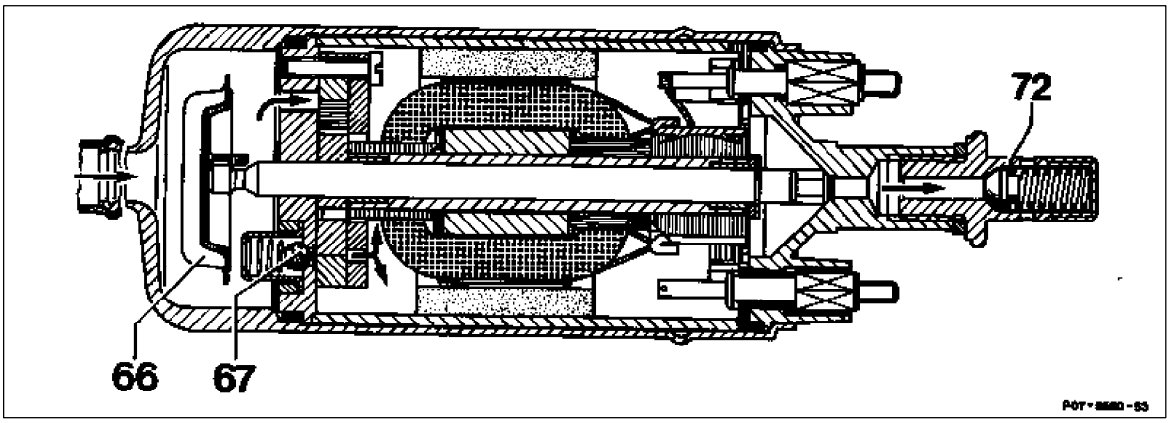

66 Damper
67 Pressure relief valve
72 Non-return valve

The fuel pump is designed as a roller cell pump. It is driven by a permanently excited electric motor.

The pump is completely filled by the flow of fuel ("wet pump") which eliminates any risk of explosion because no ignitable mixture is able to form in the small recesses in the absence of oxygen.

The fuel is drawn in from the fuel tank and pumped to the fuel distributor and diaphragm pressure regulator. The pump delivers more fuel than the maximum needs of the engine. This ensures that sufficient, cool fuel is always available to the engine. The excess fuel pumped to the engine flows back to the fuel tank.

A damper (66) is installed at the suction side in the fuel pump to avoid noises.
In addition, the fuel pumps feature a coated track as of approx. 02/86.

W
hen the engine is switched off, the non-return valve (72) prevents the holding pressure being reduced through the fuel pump.

As a result of this, the formation of vapour bubbles in the injection system is largely prevented and thus ensures that the warm engine has good starting properties.

The non-return valve (72) in the screw fitting can be replaced separately.

In the event of a pressure rise to approx. 8 bar, e. g. because of constrictions in the fuel lines, the pressure relief valve (67) opens and connects the suction side to the pressure side within the fuel pump and thus prevents any further rise in pressure.

Various models are fitted with two fuel pumps (connected in series) in order to boost delivery capacity.

The fuel pumps have a diameter of 52 mm (small pumps) or 60 mm (large pumps). If the brackets are designed for the larger pump (standardi z ation), the smaller fuel pump is installed with a spacer sleeve.

Function of the roller cell pump

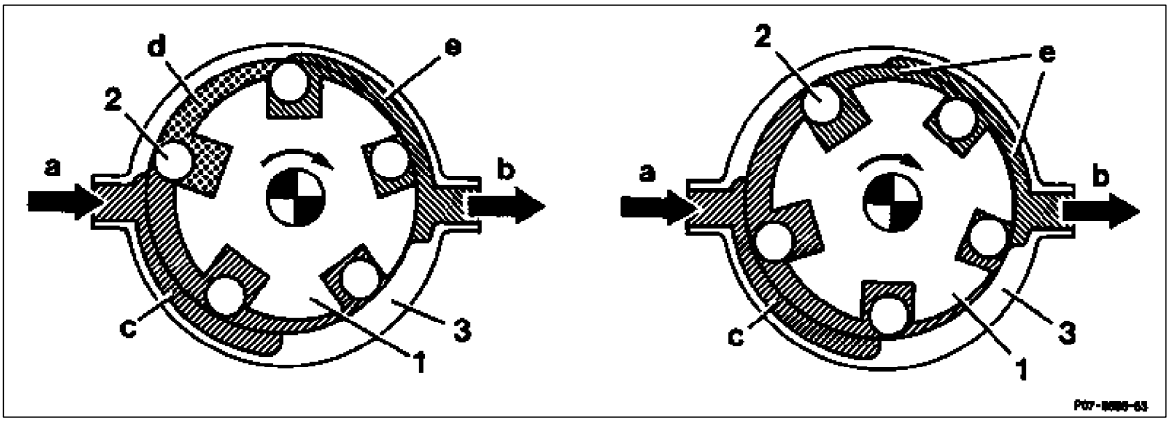

1	Rotor disc	b	Delivery side
2	Roller	c	Fuel pressureless
3	Fuel pump housing (with rotor ring)	d	Pumping fuel
a	Suction side	e	Fuel under pressure

The rotor disc (1) has 5 pocket-shaped recesses (cells) in each of which is located a roller (2). As a result of the centrifugal force produced by the rotor disc which is driven by an electric motor, the rollers are pushed out against the rotor ring in the fuel pump housing (3) and act as a seal. As a result of the eccentric arrangement of the rotor ring relative to the rotor disc, the volume between the rollers (2) alters, producing the suction and pumping effect.

c) Actuation of the fuel pump

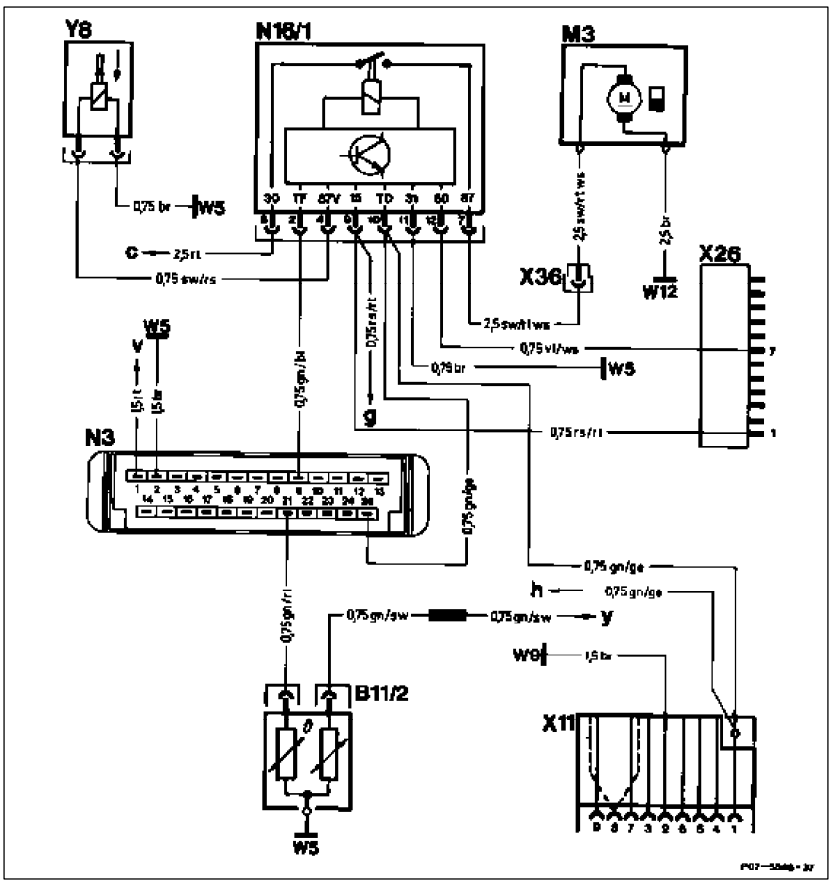

bl	=	blue
br	=	brown
ge	=	yellow
gn	=	green
rs	=	pink
rt	=	red
sw	=	black
ws	=	white

B11/2	Coolant temperature sensor (2-pin)
M3	Fuel pump
N3	KE control unit (25-pin coupling)
N16/1	Fuel pump relay with start valve actuation
W5	Ground, engine
W9	Ground, at front left headlamp unit
W12	Ground, center console
X11	Diagnostic socket/terminal block, terminal TD
X26	Plug connection, engine wiring harness (12-pin)
X36	Plug connection, fuel pump
Y8	Start valve
c	Terminal block, engine terminal 30
g	Overvoltage protection terminal 15, contact 6
h	Electronic ignition system (EZL) control unit, terminal TD (4-pin connector, supply)
v	Overvoltage protection terminal 87, contact 2
y	Electronic ignition system (EZL) control unit (4-pin connector, sensor)

The voltage for the fuel pump is supplied through the fuel pump relay or through the engine systems control unit (engine 103.984, 104 and 119).
The fuel pump runs as soon as the terminals 30 and 87 are connected (relay picks up). The voltage supply of the fuel pump is not fused.

For safety reasons, the actuation of the fuel pump is designed so that the pump can only run subject to the following conditions:

- W
  hen the ignition is switched on for about 1 second via terminal 15 (full running protection when engine stopped and ignition switched on).
- W
  hen engine is started via terminal 50
- W
  hen engine is running via terminal TD/TN (speed signal of ignition system).

Switching off the fuel pump
As a protective circuit the fuel pump is switched off 1 second after the last pulse from terminal TD/TN.

Governing engine speed
W
hen a certain number of pulses is achieved at terminal TD/TN (engine speed signal), the voltage supply of the fuel pump is interrupted and maximum engine speed is thus governed.
Exception: Engines 102, 103 in Standard version (KE 1 or KE 2) do not have engine speed governing by means of the fuel pump relay (engine speed governed by ignition system).

Note
In addition to actuation of the fuel pump, further functions are contained in the fuel pump relay and in the engine systems control unit (see sections "Fuel pump relay" and "Engine systems control unit").

d) Fuel filter

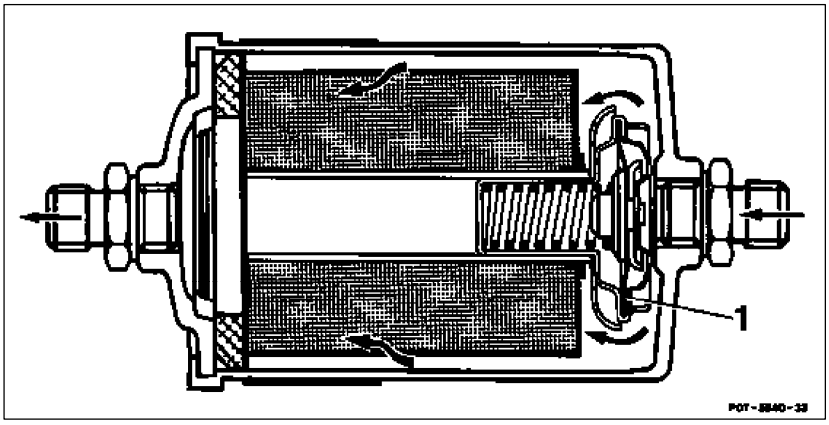

The fuel filter (55) is positioned at the fuel pump set.

The fuel filter traps impurities in the fuel before they reach the fuel distributor. For this purpose, the fuel filter is installed in the fuel line downstream of the fuel pump.

The filter is a fine filter with paper element. A damper (1) is installed on the fuel inlet side to avoid fuel noises.

The direction of the fuel flow is indicated by an arrow on the filter housing. It is essential that the filter is correctly installed during routine replacement.

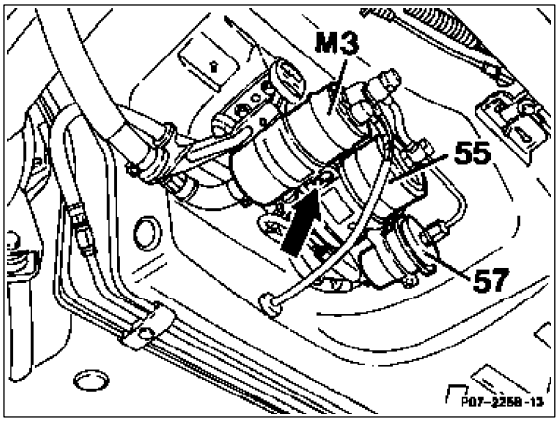

Fuel pump set, example model 201

M3 Fuel pump
55 Fuel filter
57 Fuel accumulator

e) Fuel accumulator

The housing of the fuel accumulator is made of stainless steel. The interior is divided by a diaphragm into a spring chamber and an accumulator chamber.

As soon as the fuel pump is running, the fuel (at system pressure) flows through a restriction slowly into the accumulator chamber (approx. 20 cm^3). The diaphragm is deflected against the pressure of the spring as far as the stop and the compression spring (58) is fully pretensioned.

As a result of the slow filling of the fuel accumulator, the fuel pressure at the injection valves is rapidly built up which improves starting characteristics and smooth running of the engine after start.

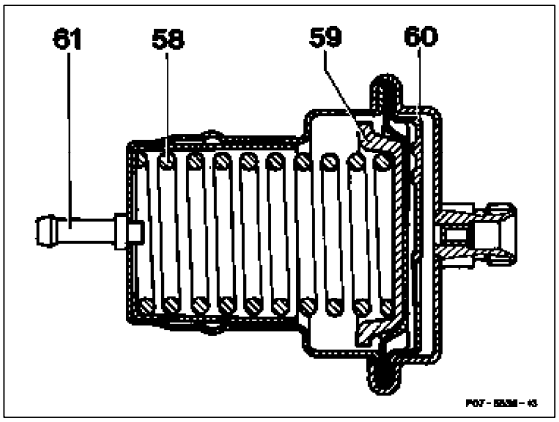

58 Compression spring
59 Diaphragm plate
60 Baffle plate
61 Connection fitting for leak line (vent)

After the engine is switched off, the holding pressure is maintained in the fuel system until the accumulator volume is exhausted. The period of time for this depends on the internal leaktightness of the system.

The fuel accumulator, as a result of its construction, has a damping effect on fuel pump noise.

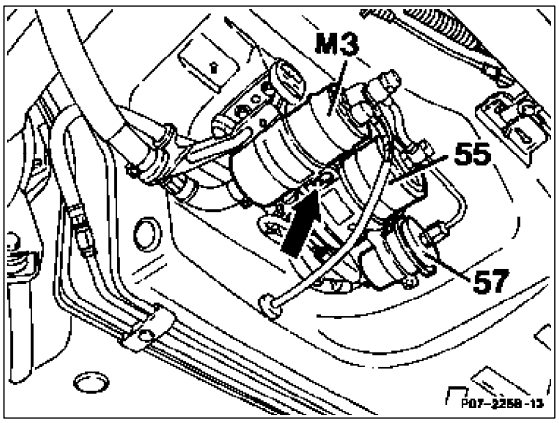

Fuel pump set, example model 201

M3 Fuel pump
55 Fuel filter
57 Fuel accumulator

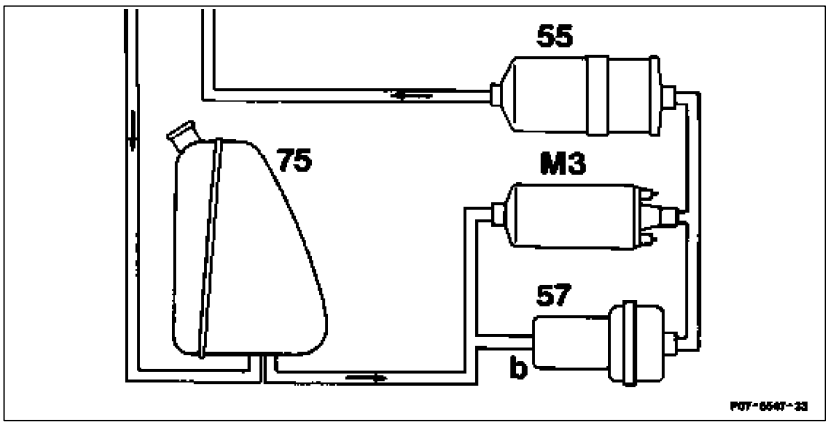

M3 Fuel pump
55 Fuel filter
57 Fuel accumulator
75 Fuel tank
b Leak line (vent)

The leak line (b) vents the spring chamber during movements of the diaphragm. For safety reasons, the leak line is connected to the pressureless suction side of the fuel pump which prevents fuel flowing to the outside if the diaphragm is defective.

f) Diaphragm pressure regulator

The diaphragm pressure regulator is positioned next to the mixture control unit.

The fuel pumped by the fuel pump passes along the feed line and through the fuel distributor to the diaphragm pressure regulator. It controls the system pressure when the engine is running and maintains this pressure at a constant level.

The system pressure is factory-set and cannot be altered. It varies from 5.3 to 6.4 bar depending on the engine.

Fluctuations in the system pressure have a direct influence on the air/fuel ratio because the system pressure acts in the fuel distributor as a backpressure on the control piston (see section "Mixture formation"). The delivery q uantity of the fuel pump and major variations in the q uantity of fuel injected, e. g. during rapid load changes, have no influence on system pressure over wide tolerances.

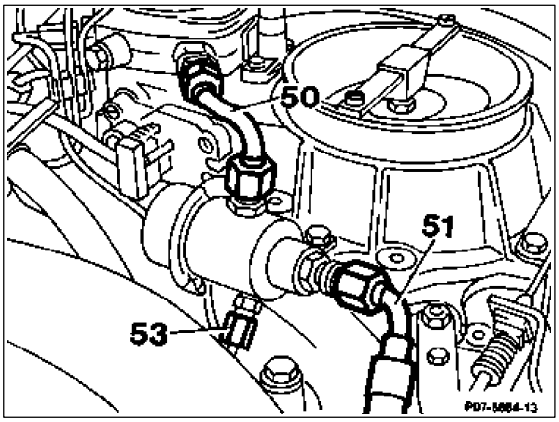

50 System pressure feed
51 Fuel return
53 Fuel distributor return

Diaphragm pressure with engine running

41 System pressure control spring
42 Diaphragm
43 Pressure chamber
44 System pressure control valve
45 Valve body
46 Sealing plate
47 Closing compression spring
48 Central drilling
49 Stop
52 Vent

a System pressure feed
b Fuel return
c Return from fuel distributor

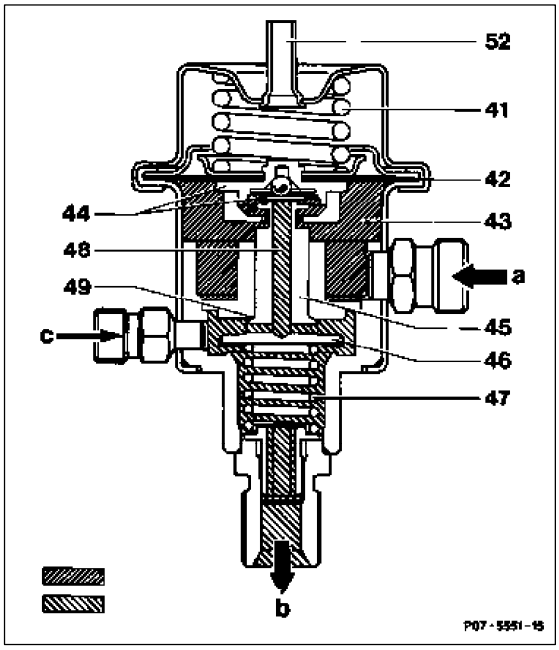

System pressure
pressureless

The fuel delivered by the fuel pump flows into the pressure chamber (43) and moves the diaphragm (42) up against the system pressure control spring (41). At first, the moving valve body (45) follows. It is pushed up by the closing compression spring (47) until it rests against the stop (49). The system pressure control valve (44) operates.

The sealing plate (46) connected
to the valve body is now lifted
off its seat. The control
and leak
q
uantity from the fuel distributor (c) flows to the return
(b).

The excess pumped fuel likewise flows to the return
(b) through the system pressure control valve (44)
and the central drilling (48).

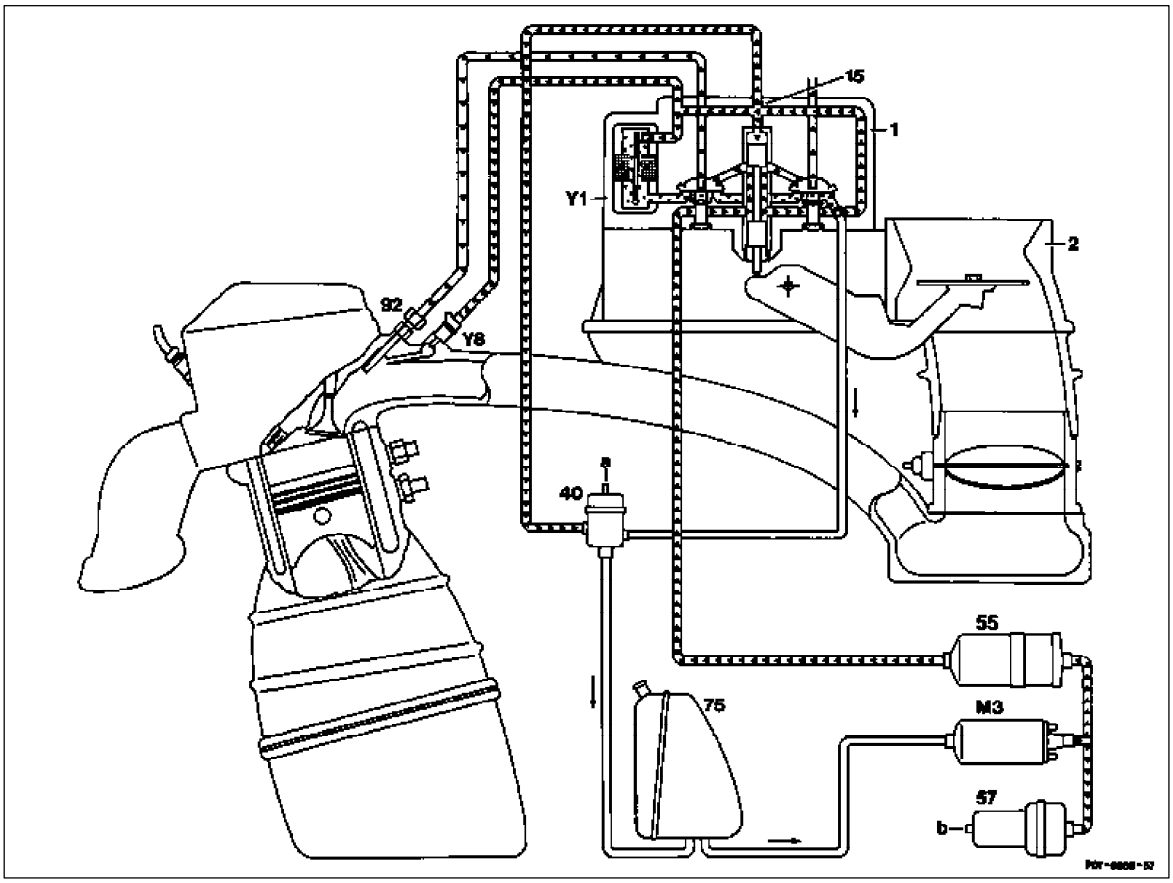

Fuel system with engine running

System pressure/upper chamber pressure
Lower chamber pressure
Injection pressure
pressureless

Y1	Electrohydraulic actuator	55	Fuel filter
Y8	Start valve	57	Fuel accumulator
1	Mixture control unit	75	Fuel tank
2	Air flow sensor	92	Injection valve
15	Fuel distributor	a	Vent
40	Diaphragm pressure regulator	b	Leak line

Diaphragm pressure regulator with engine switched off

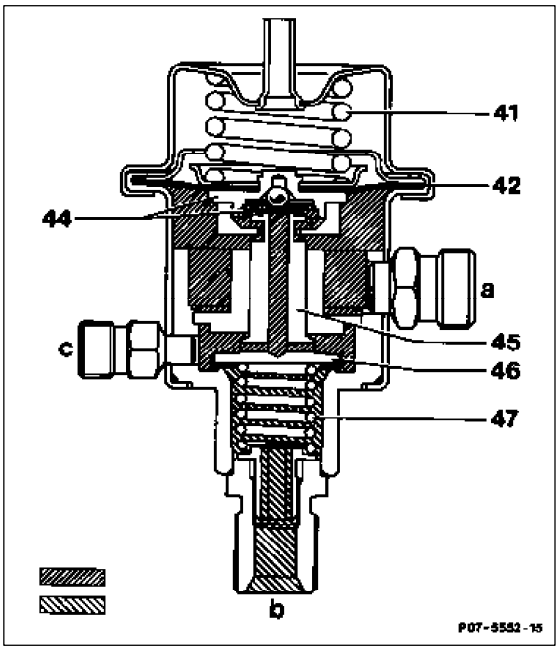

41 System pressure control spring
42 Diaphragm
44 System pressure control valve
45 Valve body
46 Sealing plate
47 Closing compression spring

a System pressure feed
b Fuel return
c Return from fuel distributor

Holding pressure
pressureless

W
hen the engine is switched off (fuel pump de-energi
z
ed) the pressure conditions alter. The system pressure decreases by a certain amount through the system pressure control valve (44) which is still open for a short time. The system pressure control spring (41) pushes diaphragm (42), valve body (45) and sealing plate (46) against the closing compression spring (47). The sealing plate is pressed onto its seat and seals off the fuel system to the return (b).

The fuel pressure drops rapidly below the opening pressure of the injection valves so that the valves close tightly. Following this, the holding pressure adopts a constant level, which is determined by the fuel accumulator.

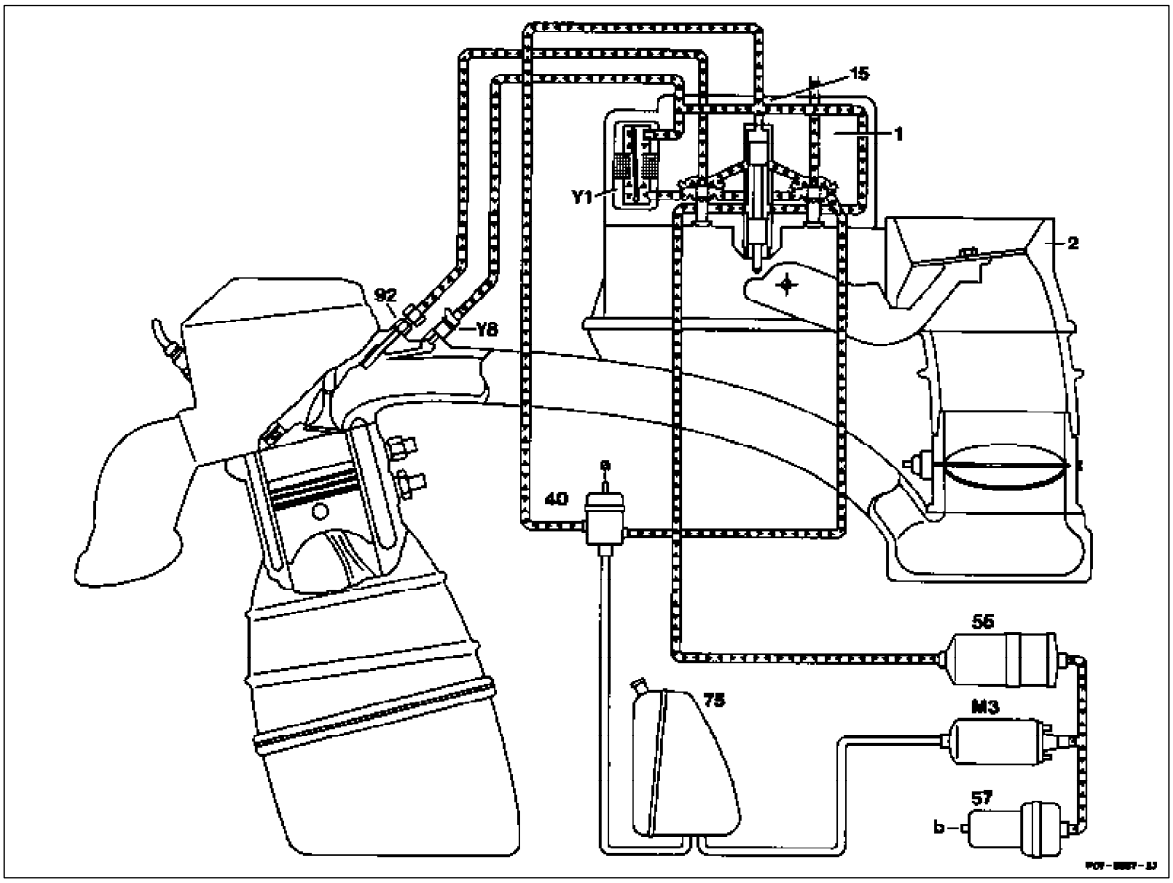

Fuel system with engine switched off

Holding pressure

pressureless

Y1	Electrohydraulic actuator	55	Fuel filter
Y8	Start valve	57	Fuel accumulator
1	Mixture control unit	75	Fuel tank
2	Air flow sensor	92	Injection valve
15	Fuel distributor	a	Vent
40	Diaphragm pressure regulator	b	Leak line